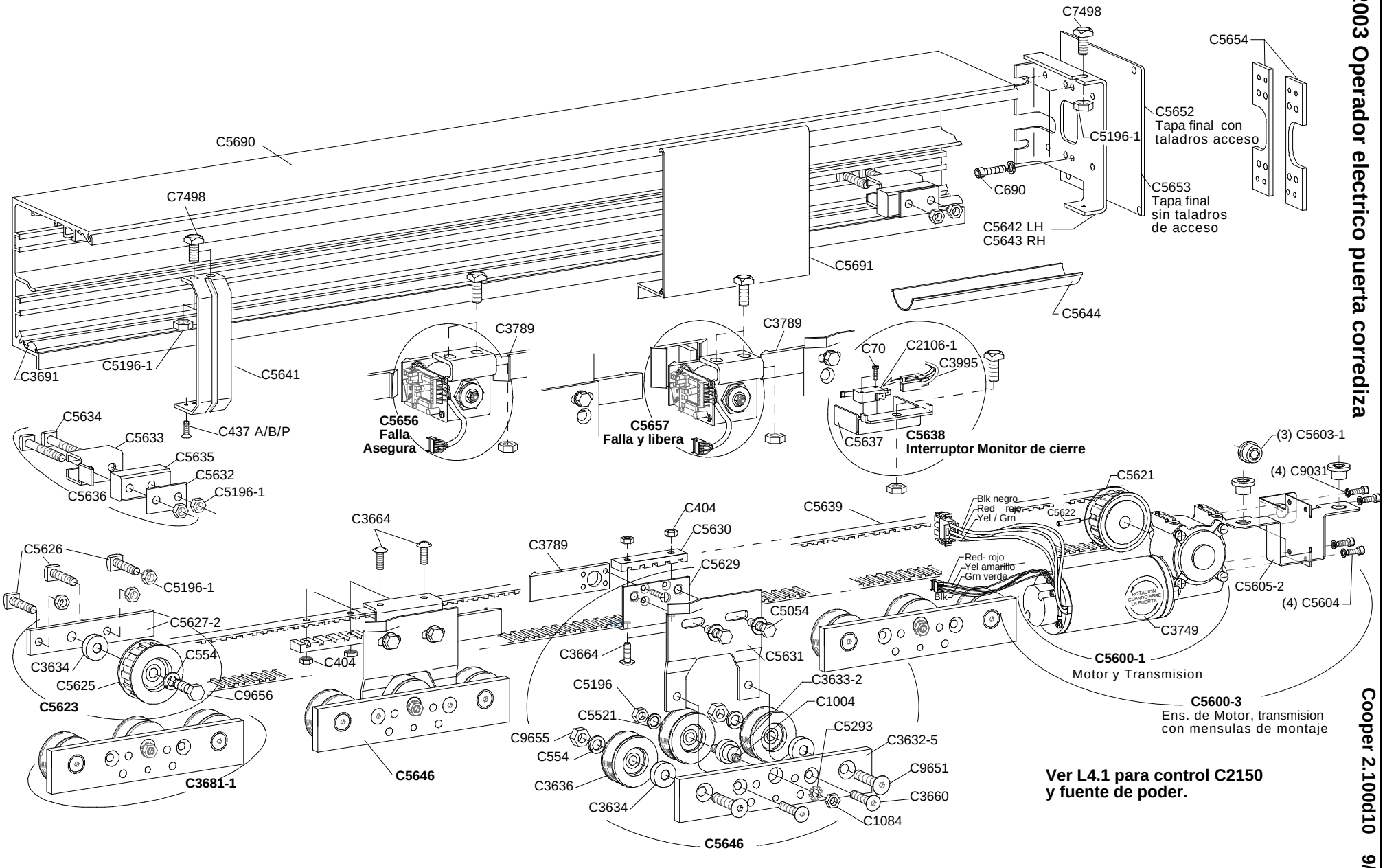
C7498
C5654
C5652
Tapa final con
taladros acceso
C5196-1
C5653
Tapa final
sin taladros
de acceso
C690
C5642 LH
C5643 RH
C5690
C7498
C5691
C5644
C3691
C5196-1
C5641
C437 A/B/P
C3789
C3789
C70
C2106-1
C3995
C5634
C5633
C5635
C5632
C5636
C5196-1
C5656
Falla
Asegura
C5657
Falla y libera
C5637
C5638
Interruptor Monitor de cierre
(3) C5603-1
(4) C9031
C5621
C5639
Blk negro
Red rojo
Yel / Grn
C5622
C404
C5630
C3664
C3789
C5626
C5196-1
C5629
Red- rojo
Yel amarillo
Grn verde
Blk
C5605-2
(4) C5604
C5627-2
C5054
C3749
C3634
C554
C404
C3664
C5631
C5625
C9656
C5600-1
Motor y Transmision
C5623
C5196
C3633-2
C1004
C5600-3
Ens. de Motor, transmision
con mensulas de montaje
C5521
C5293
C9655
C3632-5
C554
C9651
C3636
C3660
C3634
C1084
C3681-1
C5646
C5646
Ver L4.1 para control C2150
y fuente de poder.